Specifications shown below represent standard sizes only.
Palmer Leg Systems are custom built to ANY dimensions.

Download DXF Drawing File

2-LEG

Model:
LS2P

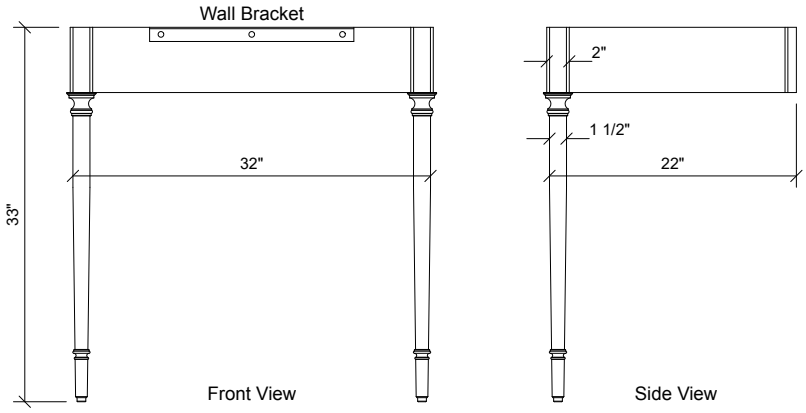

3-LEG

Model:
LS3P

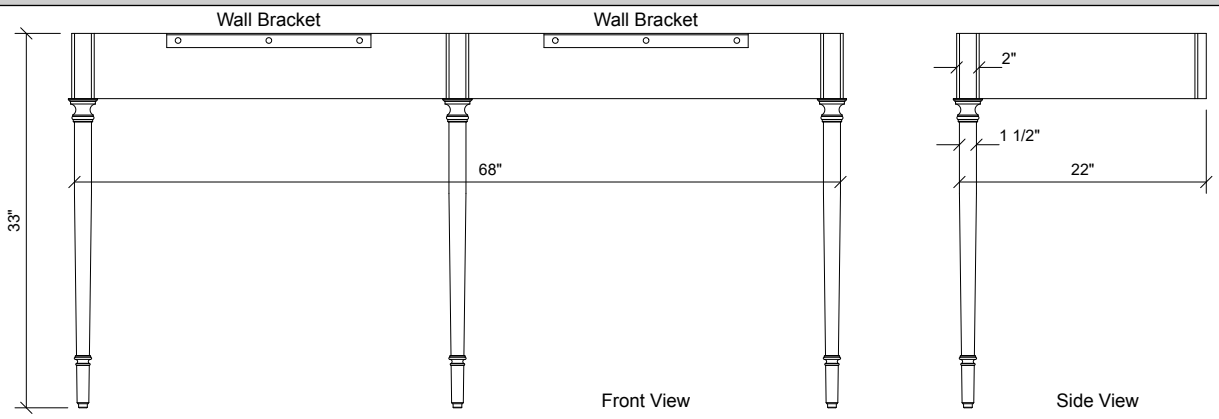

4-LEG

Model:
LS4P

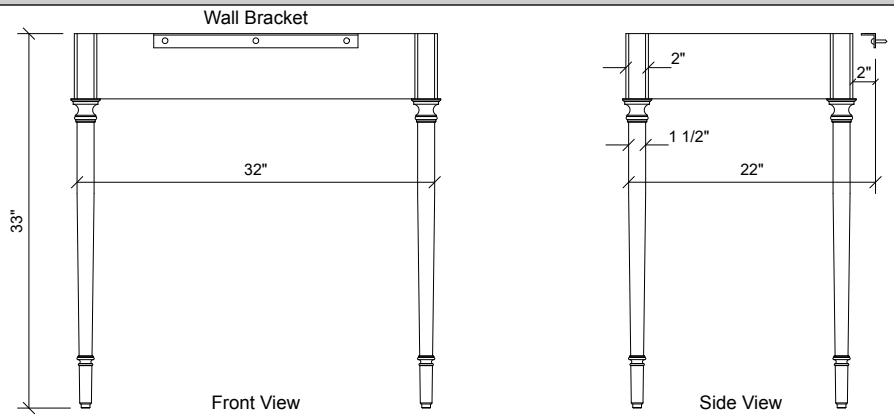

5-LEG

Model:
LS5P

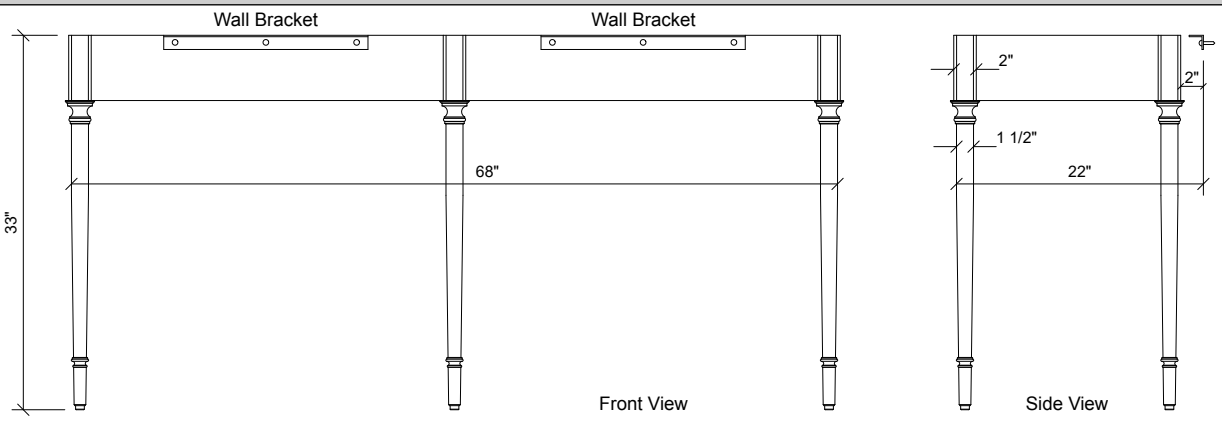

© 2019 Palmer Industries, Inc.